HIGH POWER LED HIGH BAY LIGHT

Power: 300W, 400W, 460W, replace up to 1500W MHL

OFU SERIES

UP TO 170LM/W

www.aokledlight.com

AOK®

Quality, Honesty, Service and Innovation

AOK-41

SPECIFICATIONS &FEATURE

• oFU series is designed for Industrial lighting , a superior high output, high efficiency LED High Bay light, featuring a unique optical design that virtually eliminates glare with minimal impact on performance. It is available in a variety of distributions for lighting applications such as factory, warehouses, workshops etc

CONSTRUCTION

• Light engine is thermally isolated from driver components
• UV stabilized polyester powder paint finish
• Horizontal and vertical aiming

OPTICAL / ELECTRICAL

• Four distributions to maximize performance:15°, 30°, 60°, 90°
• -40℃~50℃ operating temp range
• 1-10V dimming driver standard
• 100-277V operation 50/60HZ standard, 200-480V 50/60HZ optional

LIGHTNING PROTECTION

• With 20KV surge protection device option

UNIFIED GLARE RATING

• Glare has always been a concern with LED products and it has got increasingly more attention with higher output fixtures. The standard low glare shield block lights outside of the main beam, so from other viewing angles the fixture virtually disappears. The low glare shields were also design to have minimum impact on the total light output

FINISH

• Rugged, weather-tight design and 3G Vibration ratings ensure durability even in harsh environments

LED

• Modular optical assemblies enable 3 unique performance packages
• 50K lumens, 300Watts
• 60K lumens, 400Watts
• 70K lumens, 460Watts
• 3000K, 4000K, 5000K, 5700K, 6500K CCT
• Minimum CRI of 70, 80 and 90 optional

CERTIFICATIONS/LISTINGS

up to 170lm/w

OFU SERIES

FIXTURE DIMENSIONS OF OFU SERIES

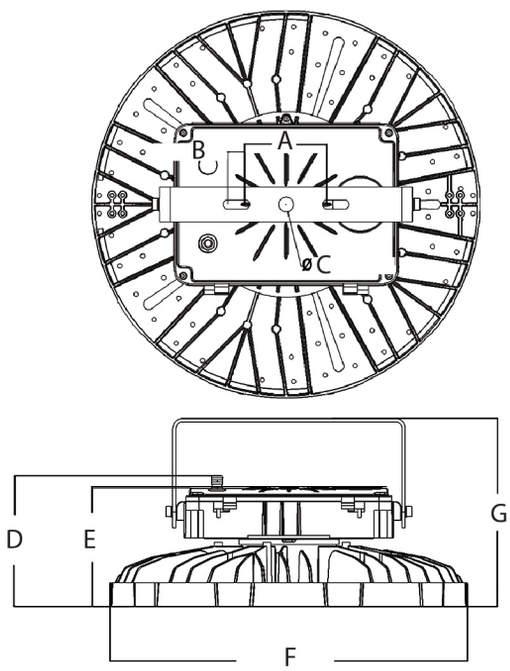

A	B	C	D
11.7cm/4.6"	2.5cm/0.98"	ϕ2cm/0.81"	20.5cm/8.07"
E	F		G
18.5cm/7.29"	ϕ55.6cm/21.92"		29.4cm/11.6"

Dimensions of 300W, 400W, 460W, replace up to 1500W MHL

ORDERING INFORMATION

AOK -		-		-		-		-		-		-	
WATTS	VOLTAGE		LED CHIPS		TYPE OF SENSOR		CCT&CRI		DISTRIBUTION		MOUNT		OPTIONS
300WoFU	NV=100-277V		L5=LUMILEDS5050		00=Without Sensor		3070=3000K 70CRI		15D=15deg		YOKE MOUNT		10KV SPD
400WoFU	HV=347/480V		O5=OSRAM5050		SN=Motion sensor		4070=4000K 70CRI		30D=30deg				20KV SPD
460WoFU					PH=Photocell		5070=5000K 70CRI		60D=60deg				
					DV=Dimmable		5770=5700K 70CRI		90D=90deg				
							3080=3000K 80CRI						
							4080=4000K 80CRI						
							5080=5000K 80CRI						
							5780=5700K 80CRI						

AOK® *Quality, Honesty Service and Innovation*

WARRANTY
5-year standard warranty, 10-year warranty optional.
Please consult with AOK sales for detailed agreement.

CONSTRUCTION FEATURES OF OFU SERIES

1. Waterproof connector
2. Top performance driver 1-10V dimmable
3. Die casting fixture body
4. Yoke mount bracket
5. Surge protection device
6. Optical grade ploycarbonate lens multiple beam angle optional

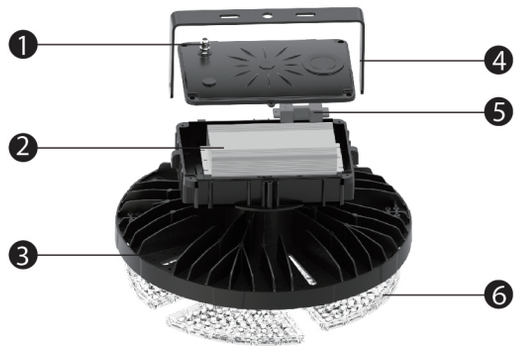

TECHNICAL SPECIFICATIONS @5000K

MODEL	WATTS	Replace MHL	LUMEN OUTPUT / OPTICS	IP & IK	FIXTURE DIMENSION	NW	MAXIMUM CURRENT
AOK-300WoFU	300	1000W	45925lm / 15° 51536lm / 30° 50487lm / 60°	IP65&IK08	23*12*23" (58*31*58cm)	44lbs(20kgs)	3.3A
AOK-400WoFU	400	1200W	56222lm / 15° 65915lm / 30° 65032lm / 60°	IP65&IK08	23*12*23" (58*31*58cm)	44lbs(20kgs)	4.4A
AOK-460WoFU	460	1500W	61112lm / 15° 73004lm / 30° 74136lm / 60°	IP65&IK08	23*12*23" (58*31*58cm)	44lbs(20kgs)	5.1A

PHOTOMETRY

15degree

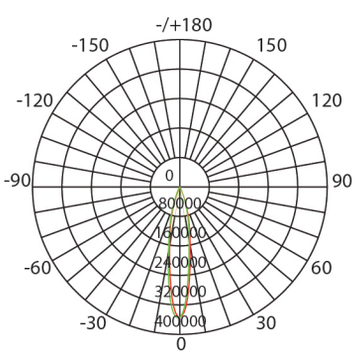

AVERAGE BEAM ANGLE(50%):18.2DEG
UNIT:cd

C0/180 Ic:353054 C90/270 Ic:354895
9.2,9.1 10.0,8.2

30degree

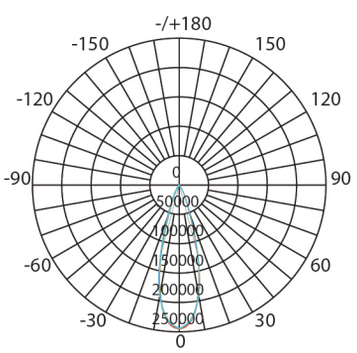

AVERAGE BEAM ANGLE(50%):29.8 DEG
UNIT:cd

C0/180,29.5deg C60/240,29.9deg
C30/210,29.6deg C90/270,30.1deg

60degree

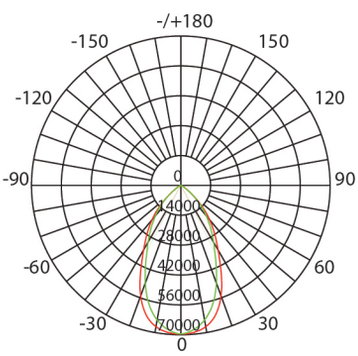

AVERAGE BEAM ANGLE(50%):57.4 DEG
UNIT:cd

C0/180 Ic:69654 C90/270 Ic:69607
30.1,30.1 27.3,27.3

SPECIFICATIONS AND DETAILS ARE SUBJECT TO CHANGE WITHOUT NOTIFICATION, CONTACT AOK FOR UP TO DATE DETAILS.